NERI

Light 104 JM12.25.118

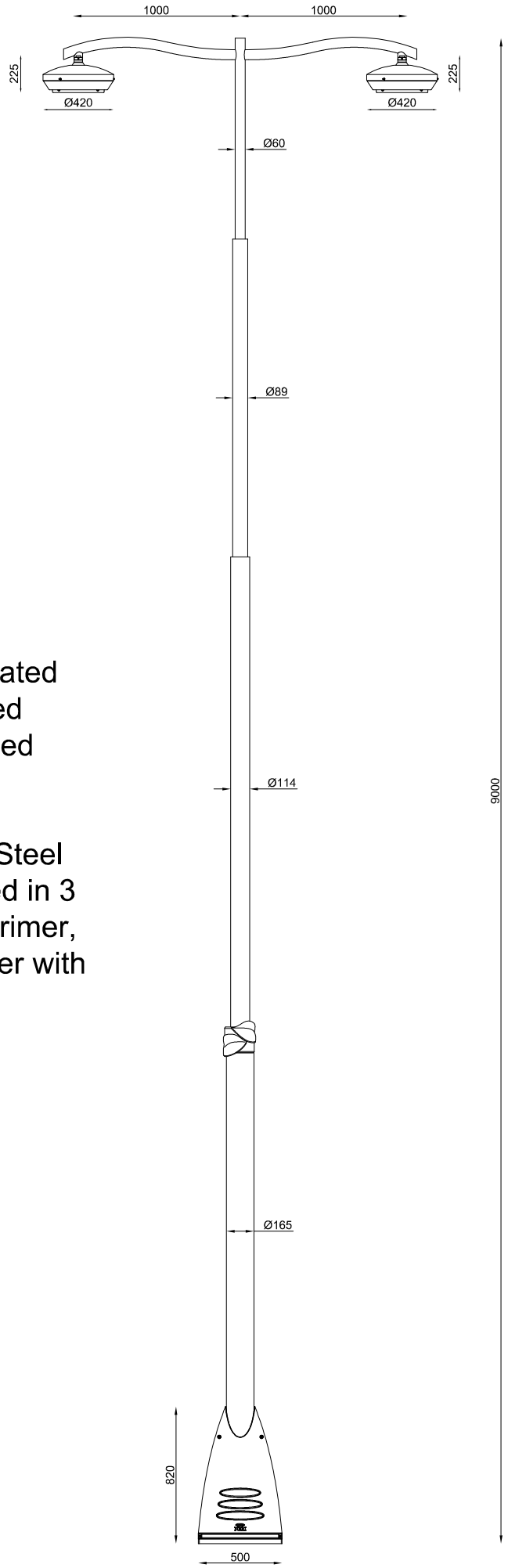

- NERI
  Light 104 made of Aluminum & Powder coated in Neri Grey Colour. Screen in flat tempered glass/Polycarbonate. Suitable for suspended installation.

- Pole (Saiph) & Bracket (Altair C) made of Steel pipe sections.Pole and it's parts are painted in 3 layer coating in which 1st layer with etch primer, 2nd layer with epoxy primer & 3rd final layer with PU metallic paint.